DWG
36547-50

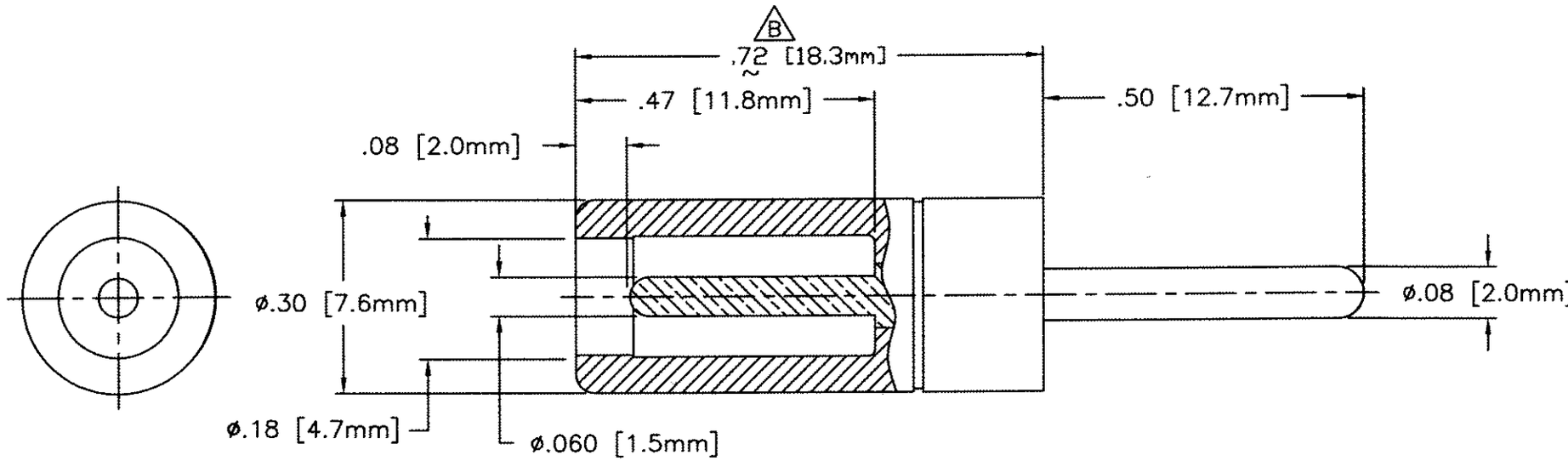


REF: DIN 42 802

| REV. | DESCRIPTION | APPROVAL DATE | APPROVED BY |
|---|---|---|---|
| B | REV PER ECO 18236 TAS 7/18/12 | 7/30/12 | CDG |
| A | REL FOR PROD ECO 854 /BB 9/21/94 | 11/9/94 | LL |

THIS DRAWING CONTAINS CONFIDENTIAL AND PROPRIETARY INFORMATION AND MAY NOT BE ISSUED OR REPRODUCED, IN WHOLE, OR IN PART, WITHOUT THE EXPRESS WRITTEN PERMISSION OF PLASTICS ONE INC.

TOLERANCES
UNLESS OTHERWISE SPECIFIED
ALL DIMENSIONS IN INCHES
DIMENSIONS IN [ ] METRIC

FRACTIONAL
±1/64

DECIMAL
.00 ±.01 [.25mm]
.000 ±.005 [.127mm]

ANGULAR
±.5°

| APPROVALS | DATE |
|---|---|
| DRAWN Brindle | 12/7/93 |
| CHECKED K. Eperly | 7/20/12 |
| PROJ ENGR Brindle | 12/7/93 |
| APPROVED K. Eperly | 7/20/12 |
| PROJECT 1423 | FSCM |

PlasticsOne®
Medical Design and Manufacture
6591 MERRIMAN ROAD, S.W., ROANOKE, VA. 24018
PHONE: 540-772-7950 FAX: 540-989-7519

TITLE
ADAPTER, 36547, 1.5/2.0mm

SCALE 4:1

| SIZE | DWG | REV | SHT |
|---|---|---|---|
| A | 36547-50 | B | 1 OF 1 |