DWG 2438-50

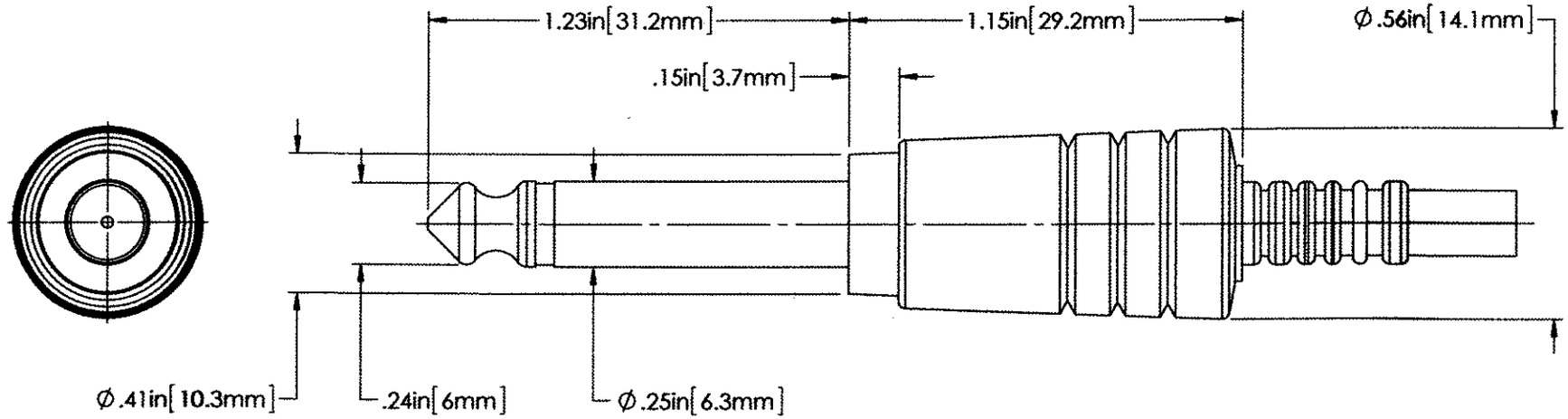

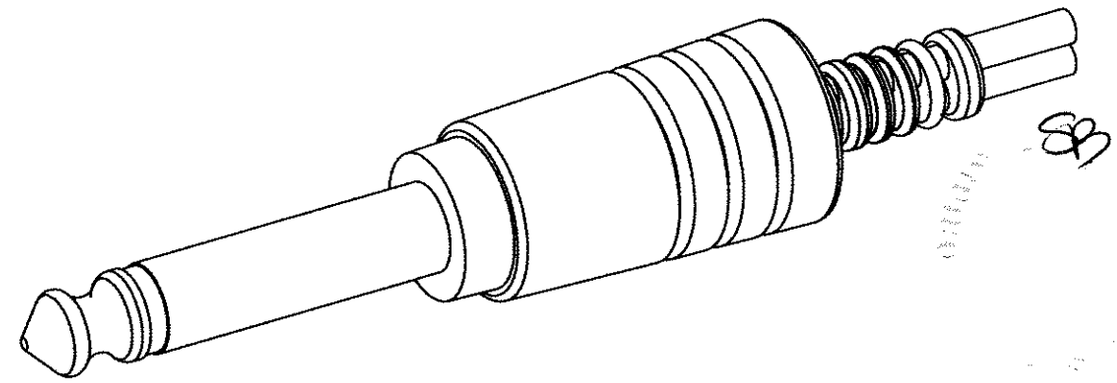

REV	DESCRIPTION	DATE	BY
A	REL PER ECO 18518 /BB 08/31/12	10/1/12	CDG

REVISIONS

THIS DRAWING CONTAINS CONFIDENTIAL AND PROPRIETARY INFORMATION AND MAY NOT BE ISSUED OR REPRODUCED, IN WHOLE, OR IN PART, WITHOUT THE EXPRESS WRITTEN PERMISSION OF PLASTICS ONE INC.

TOLERANCES
UNLESS OTHERWISE SPECIFIED
ALL DIMENSIONS IN INCHES
DIMENSIONS IN [ ] METRIC

FRACTIONAL
±1/64

DECIMAL
.00 ±.01 [.25mm]
.000 ±.005 [.127mm]

ANGULAR
±.5°

APPROVALS	DATE
DRAWN BBRINDLE	08/31/12
CHECKED	9/19/12
PROJ ENGR	
APPROVED	9/25/12
PROJECT	FSCM

PlasticsOne
Medical Design and Manufacture
6591 MERRIMAN ROAD, S.W., ROANOKE, VA, 24018
PHONE: 540-772-7950 FAX: 540-989-7519

TITLE PLUG 448

SCALE 2:1

SIZE	DWG	REV	SHT
A	2438-50	A	1 OF 1